Nooteboom OSDS-48-03V, 6 M EXTENDABLE, LAST AXLE ...
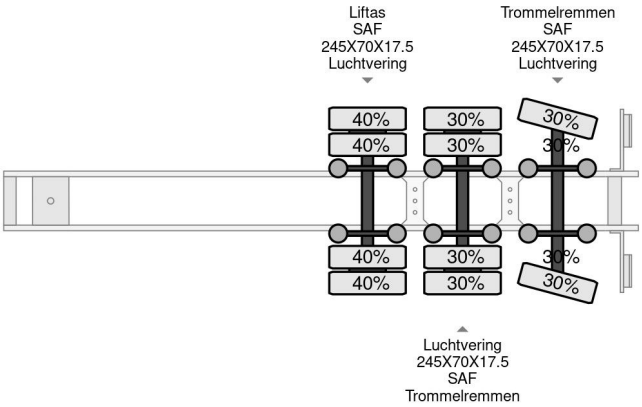
Referentienummer: NO001615