Broshuis 31N55A, EXTENDABLE, LAST AXLE STEERING
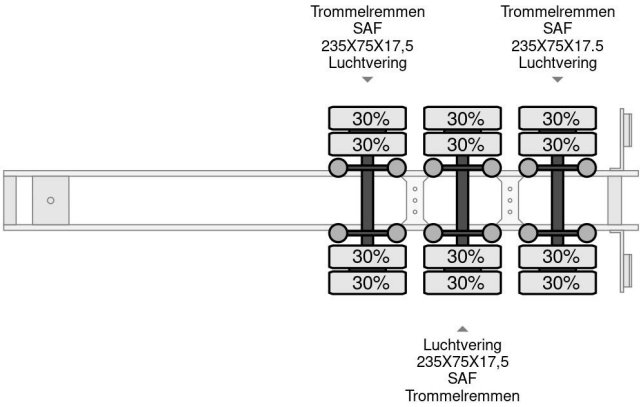
Referentienummer: BR007200