DEMICO 2 AXLE STEELSPRING
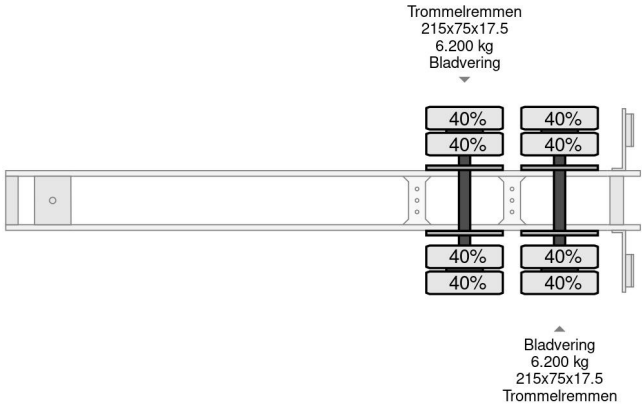
Referentienummer: DES00233