MAN TGX 41.540 160 TON, FULL STEELSPRING, MA... 8x4
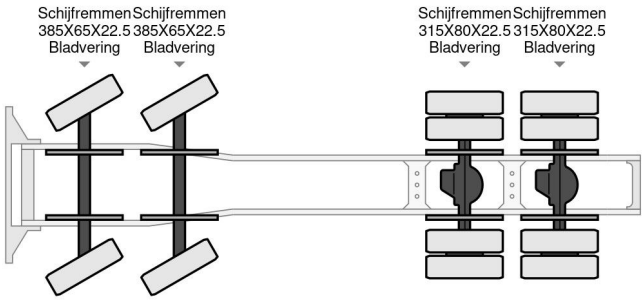
Referentienummer: MA055385