Faymonville 2 AXLE STEERING 4.3 METER EXTENDABLE
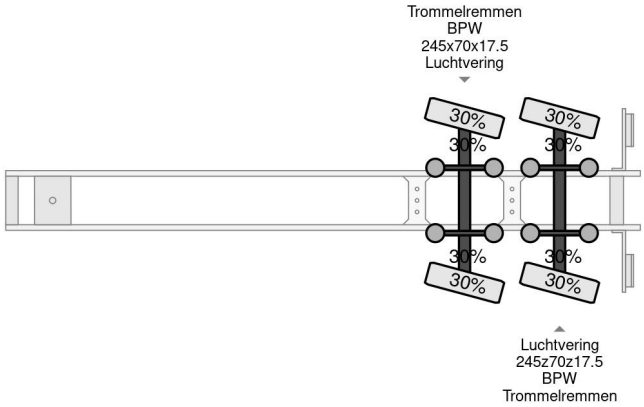
Referentienummer: FA113297