Broshuis 9000 KG LIFT, LAST AXLE STEERING
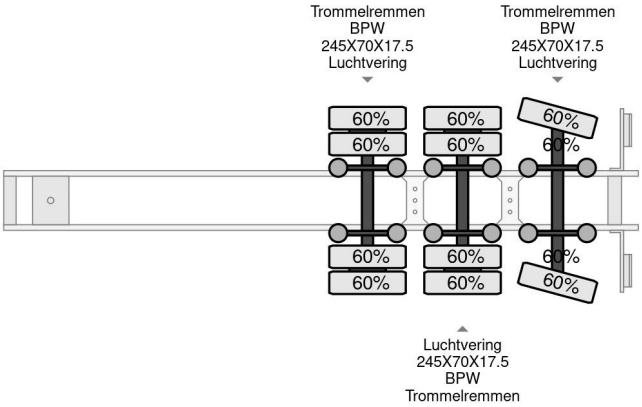
Referentienummer: BR007170-G